TECO	OUTLINE DIMENSIONS 3-PHASE INDUCTION MOTOR	FRAME NO : D90L

POLE	kW	HP	RPM	FRAME
2	2.20	2.95	2870	D90L-2
8	0.55	0.74	700	D90L-8

Totally Enclosed Fan-Cooled Type. Squirrel-Cage Rotor.

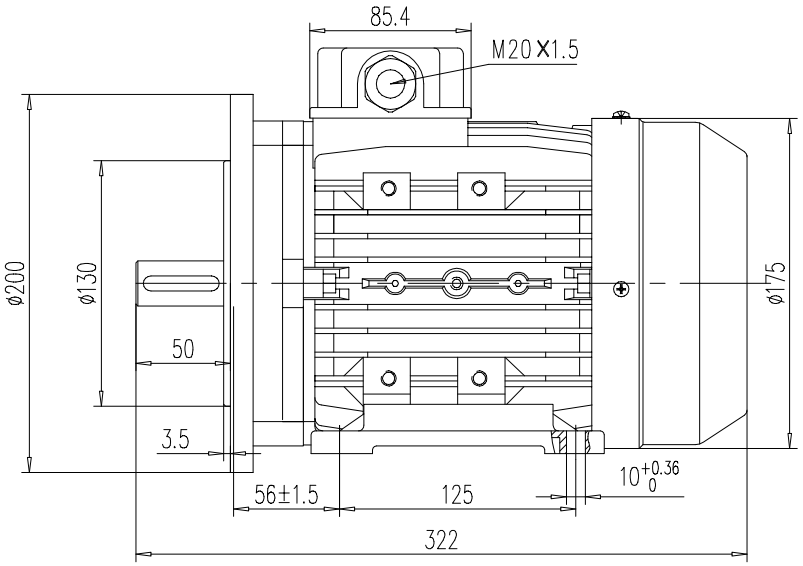

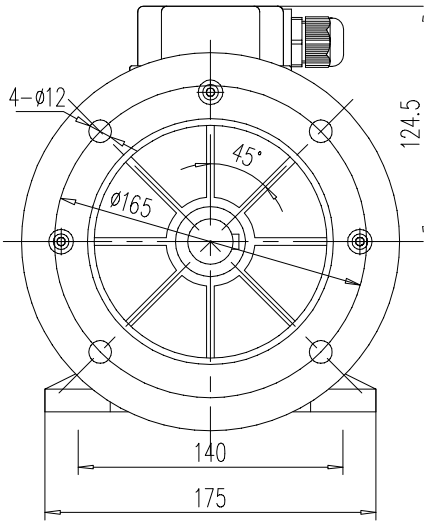

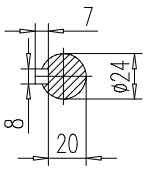

NOTES:

1. DIMENSIONS IN mm.
2. SCALE 1: 4.
3. FOOT AND FLANGE MOUNTED IM2001.
4. FOR DIRECT DRIVE ONLY.
5. IP55 PROTECTION.

MAX ALLOY

DWN.	DP	16. 12. 24	REV : 00
CHKD.	AN	16. 12. 24	
APPD.	JC	16. 12. 24	